CDW-63822CU-00/01

DATASHEET

Software：

客　　户 Customer	客户承认 Approve（请盖印章）	日 期 Date

拟制 Design	审核 Check	批准 Approve	版本 Version	日期 Date
刘丽君	闫磊	李巍	V1.1	2020.06.16

深 圳 市 中 龙 通 电 子 科 技 有 限 公 司
CHINA DRAGON TECHNOLOGY LIMITED
工厂地址：深圳市宝安区沙井街道南浦路林坡坑蚝三第一工业园 B4 栋
电话：(86　755) 81449957
传真：(86　755) 81449967
E-mail: Info@cdtech.cn
Http://www.cdtech.cn

更改记录：

Reversion History：

版本 Version	日期 Date	更改内容 Modification
1.0	2020.03.23	Draft
1.1	2020.06.16	Update 1.Modular photo

1. Overview

The CDW-63822CU-00/01 is a highly integrated single-chip that support 2-stream 802.11ac solutions with Multi-user MIMO (Multiple-Input, Multiple-Output) with Wireless LAN (WLAN) USB2.0 network interface controller It combines a WLAN MAC, a 2T2R capable WLAN baseband, and RF in s single chip. The CDW-63822CU-00/01 provides a complete solution for a high-performance integrated wireless and Bluetooth device.

2. Features

2.1 WLAN

- IEEE 802.11a/b/g/n/ac compatible WLAN
- 20MHz / 40MHz / 80MHz bandwidth transmission
- Complies with USB2.0 for WLAN and BT controller
- Dual-band 2T2R mode with data rate up to 867Mbps
- Support 802.11ac 2x2,Wave-2 compliant with MU-MIMO
- Complete 802.11n MIMO solution for 2.4GHz and 5Ghz band
  Maximum PHY data rate up to 173.3 Mbps using 20MHz bandwidth, 400Mbps using 40MHz bandwidth, and 866.7Mbps using 80MHz bandwidth
- DSSS with DBPSK and DQPSK, CCK modulation with long and short preamble
- Short Guard Interval (400ns)
- Sounding packet

2.1 Bluetooth

- Support Bluetooth 5.0 system
- Compatible with Bluetooth v2.1 Systems
- Supports all packet types in basic rate and enhanced data rate
- Dual Mode support: Simultaneous LE and BR/EDR
- Enhanced BT/Wi-Fi Coexistence Control to improve transmission quality in different profiles
- Integrated MCU to execute Bluetooth protocol stack
- Supports Bluetooth Low Energy
- Supports Enhanced Power Control

3. System Block Diagram

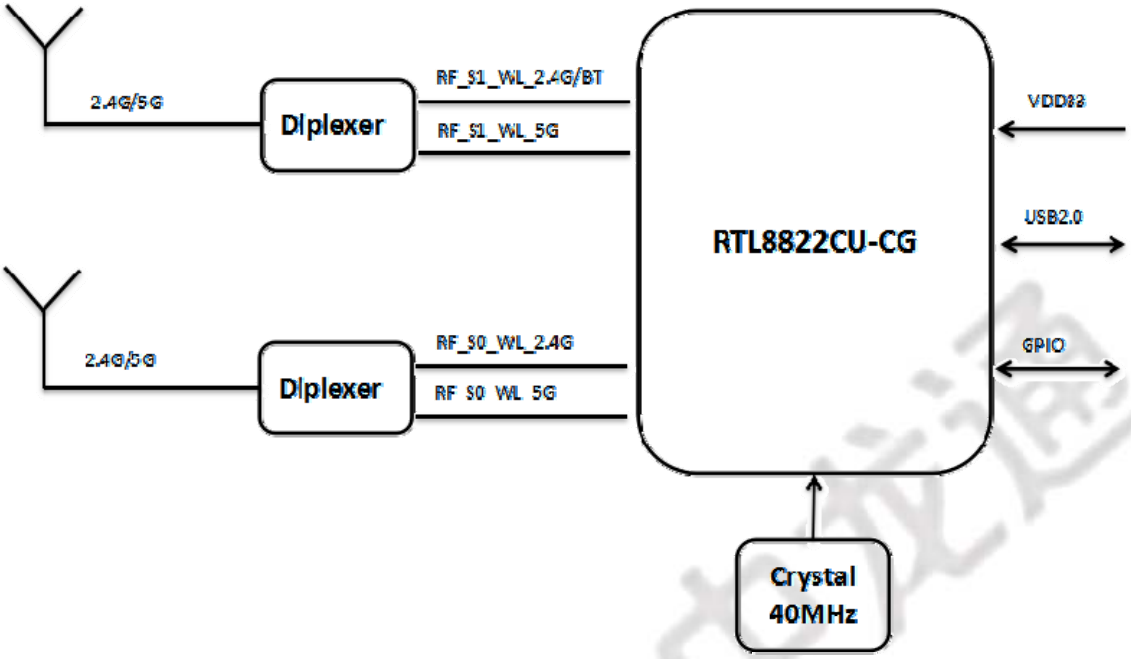

SharedAnt-BT (CDW-63822CU-00)

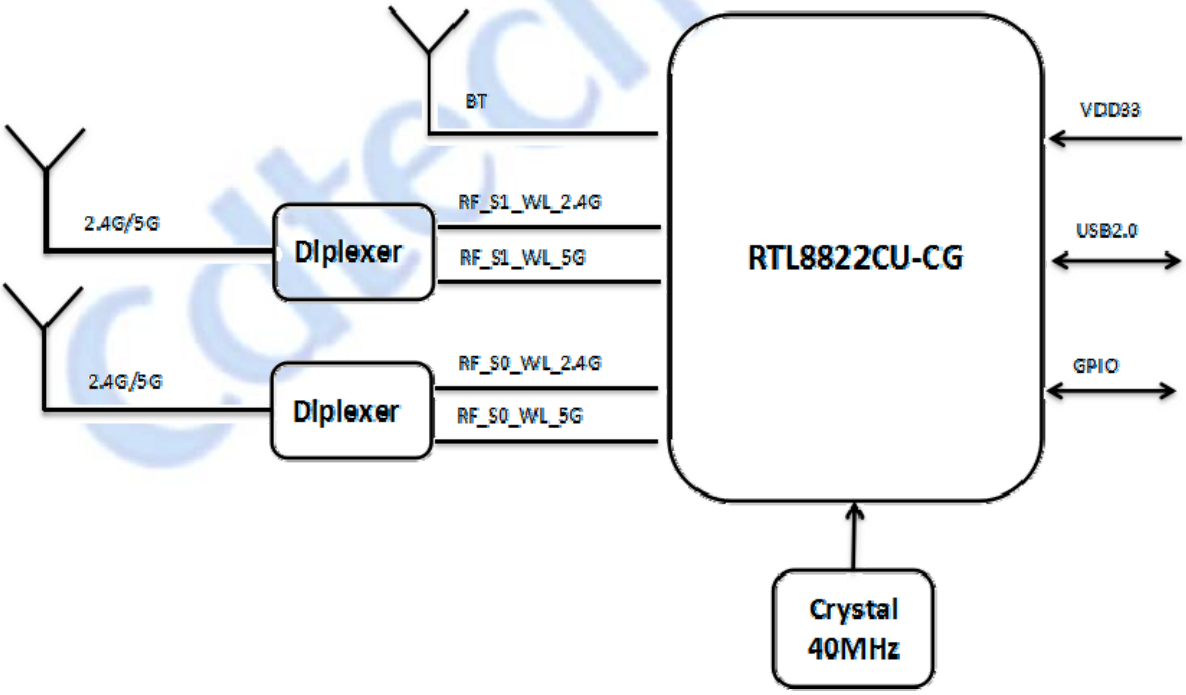

no SharedAnt-BT (CDW-63822CU-01)

4. General Specification

Model	CDW-63822CU-00/01
Product Name	WIFi 11a/b/g/n/ac 2T2R and BT5.0 Module
Major Chipset	Realtek RTL8822CU-CG
Standard	IEEE802.11a/b/g/n/ac, 802.3, 802.3u, BT2.1/3.0/4.0/5.0
Data Transfer Rate	1,2,5.5,6,11,12,18,22,24,30,36,48,54,60, 90,120 and maximum of 867Mbps
Modulation Method	DSSS/DBPSK/DQPSK/16-QAM/ 64-QAM/256QAM
Frequency Band	2.4~2.4835GHz , 5.0~5.8 GHz
Spread Spectrum	IEEE 802.11b: DSSS (Direct Sequence Spread Spectrum) IEEE802.11a/g/n/ac: OFDM (Orthogonal rthogonal Frequency Division Multiplexing)
Interface	USB2.0
Operating Temperature	0°C to 70°C
Storage Temperature	-20°C to 85°C
Humidity	5 to 90 % maximum (non-condensing)
Dimension	27x18x2.4mm (LxWxH)±0.2mm

5. DC Characteristics

Symbol	Parameter	Min.	Typ.	Max	Units
VD33	3.3V I/O supply Voltage	3.0	3.3	3.6	V
IDD_3.3V	3.3V Rating Current	--	--	800	mA
VD10	1.05V Core Supply Voltage	0.945	1.05	1.155	V
V_{IH}	Input high Voltage	2.0	3.3	3.6	V
V_{IL}	Input low Voltage	--	0	0.9	V
V_{OH}	output high Voltage	2.97	--	3.3	V
V_{OL}	output low Voltage	0	--	0.33	V

6. Electrical Characteristics

6.1 WiFi Section:

Feature	Description
WLAN Standard	IEEE 802.11a/b/g/n/ac WiFi compliant
Frequency	2.400 GHz ~ 2.497 GHz (2.4 GHz ISM Band)
Number of	2.4GHz：Ch1 ~ Ch14
Modulation	802.11b : DQPSK, DBPSK, CCK 802.11 g/n : OFDM /64-QAM,16-QAM, QPSK, BPSK
Output Power	802.11b /11Mbps : 17dBm ± 2 dB @ EVM ≤ -15dB
	802.11g /54Mbps : 15 dBm ± 2 dB @ EVM ≤ -28dB
	802.11n /MCS7 : 14 dBm ± 2 dB @ EVM ≤ -30dB
Receive Sensitivity (11b,20MHz) @8% PER	- 1Mbps PER @ -96 dBm, typical
	- 2Mbps PER @ -93 dBm, typical
	- 5.5Mbps PER @ -92 dBm, typical
	- 11Mbps PER @ -89 dBm, typical
Receive Sensitivity (11g,20MHz) @10% PER	- 6Mbps PER @ -93 dBm, typical
	- 9Mbps PER @ -89 dBm, typical
	- 12Mbps PER @ -88 dBm, typical
	- 18Mbps PER @ -85 dBm, typical
	- 24Mbps PER @ -82 dBm, typical
	- 36Mbps PER @ -80 dBm, typical
	- 48Mbps PER @ -78 dBm, typical
	- 54Mbps PER @ -76 dBm, typical
Receive Sensitivity (11n,20MHz) @10% PER	- MCS=0 PER @ -93 dBm, typical
	- MCS=1 PER @ -88 dBm, typical
	- MCS=2 PER @ -87 dBm, typical
	- MCS=3 PER @ -83 dBm, typical
	- MCS=4 PER @ -79 dBm, typical
	- MCS=5 PER @ -78 dBm, typical
	- MCS=6 PER @ -76 dBm, typical
	- MCS=7 PER @ -74 dBm, typical
	- MCS=0 PER @ -90 dBm, typical
	- MCS=1 PER @ -86 dBm, typical

Receive Sensitivity (11n,40MHz) @10% PER	- MCS=2 PER @ -83 dBm, typical
	- MCS=3 PER @ -81 dBm, typical
	- MCS=4 PER @ -78 dBm, typical
	- MCS=5 PER @ -76 dBm, typical
	- MCS=6 PER @ -74 dBm, typical
	- MCS=7 PER @ -72 dBm, typical
Maximum Input Level	802.11b : -10 dBm
	802.11g/n : -20 dBm
Antenna	Small antennas with 0~2 dBi peak gain

2.4GHz RF Specification

6.2 5GHz RF Specification

Feature	Description
WLAN Standard	IEEE 802.11a/n/ac 2x2, WiFi compliant
Frequency Range	4.900 GHz ~ 5.845 GHz (5.0 GHz ISM Band)
Number of Channels	5.0GHz：Please see the table
Modulation	802.11a : OFDM /64-QAM,16-QAM, QPSK, BPSK 802.11n : OFDM /64-QAM,16-QAM, QPSK, BPSK 802.11ac : OFDM /256-QAM
Output Power	802.11a /54Mbps : 15 dBm ± 2 dB @ EVM ≤ -25dB
	802.11n HT20 /MCS7 : 14 dBm ± 2 dB @ EVM ≤ -28dB
	802.11n HT40 /MCS7 : 14 dBm ± 2 dB @ EVM ≤ -28dB
	802.11ac VHT20 /MCS8 : 13 dBm ± 2 dB @ EVM ≤ -30dB
	802.11ac VHT40 /MCS9 : 12 dBm ± 2 dB @ EVM ≤ -32dB
	802.11ac VHT80 /MCS9 : 12 dBm ± 2 dB @ EVM ≤ -32dB
Receive Sensitivity (11a,20MHz) @10% PER	- 6Mbps PER @ -94 dBm, typical
	- 9Mbps PER @ -90 dBm, typical
	- 12Mbps PER @ -88 dBm, typical
	- 18Mbps PER @ -85 dBm, typical
	- 24Mbps PER @ -83 dBm, typical
	- 36Mbps PER @ -81 dBm, typical
	- 48Mbps PER @ -78 dBm, typical
	- 54Mbps PER @ -76 dBm, typical
	- MCS=0 PER @ -93 dBm, typical
	- MCS=1 PER @ -89 dBm, typical
	- MCS=2 PER @ -87 dBm, typical
	- MCS=3 PER @ -85 dBm, typical

Receive Sensitivity (11n,20MHz) @10% PER	- MCS=4 PER @ -80 dBm, typical
	- MCS=5 PER @ -77 dBm, typical
	- MCS=6 PER @ -75 dBm, typical
	- MCS=7 PER @ -74 dBm, typical
Receive Sensitivity (11n,40MHz) @10% PER	- MCS=0 PER @ -91 dBm, typical
	- MCS=1 PER @ -88 dBm, typical
	- MCS=2 PER @ -85 dBm, typical
	- MCS=3 PER @ -82 dBm, typical
	- MCS=4 PER @ -78 dBm, typical
	- MCS=5 PER @ -76 dBm, typical
	- MCS=6 PER @ -73 dBm, typical
	- MCS=7 PER @ -71 dBm, typical
Receive Sensitivity (11ac,20MHz) @10% PER	- MCS=0, NSS1 PER @ -94 dBm, typical
	- MCS=1, NSS1 PER @ -89 dBm, typical
	- MCS=2, NSS1 PER @ -85 dBm, typical
	- MCS=3, NSS1 PER @ -83 dBm, typical
	- MCS=4, NSS1 PER @ -77 dBm, typical
	- MCS=5, NSS1 PER @ -75 dBm, typical
	- MCS=6, NSS1 PER @ -73 dBm, typical
	- MCS=7, NSS1 PER @ -71 dBm, typical
	- MCS=8, NSS1 PER @ -69 dBm, typical
Receive Sensitivity (11ac,40MHz) @10% PER	- MCS=0, NSS1 PER @ -91 dBm, typical
	- MCS=1, NSS1 PER @ -88dBm, typical
	- MCS=2, NSS1 PER @ -85 dBm, typical
	- MCS=3, NSS1 PER @ -81 dBm, typical
	- MCS=4, NSS1 PER @ -78 dBm, typical
	- MCS=5, NSS1 PER @ -75 dBm, typical
	- MCS=6, NSS1 PER @ -72 dBm, typical
	- MCS=7, NSS1 PER @ -70 dBm, typical
	- MCS=8, NSS1 PER @ -68 dBm, typical
	- MCS=9, NSS1 PER @ -66 dBm, typical
	- MCS=0, NSS1 PER @ -88 dBm, typical
	- MCS=1, NSS1 PER @ -85 dBm, typical
	- MCS=2, NSS1 PER @ -81 dBm, typical
	- MCS=3, NSS1 PER @ -78 dBm, typical
	- MCS=4, NSS1 PER @ -75 dBm, typical

Receive Sensitivity (11ac,80MHz) @10% PER	- MCS=5, NSS1 PER @ -72 dBm, typical
	- MCS=6, NSS1 PER @ -69 dBm, typical
	- MCS=7, NSS1 PER @ -67 dBm, typical
	- MCS=8, NSS1 PER @ -65 dBm, typical
	- MCS=9, NSS1 PER @ -63 dBm, typical
Maximum Input Level	802.11a/n/ac : -20 dBm
Antenna Reference	Small antennas with 0~2 dBi peak gain

6.3 Bluetooth Section:

Feature	Description		
General Specification			
Bluetooth Standard	BT2.1/3.0/4.0/5.0		
Host Interface	USB2.0		
Antenna Reference	Small antennas with 0~2 dBi peak gain		
Frequency Band	2402 MHz ~ 2480 MHz		
Number of Channels	79 channels		
Modulation	FHSS, GFSK, DPSK, DQPSK		
RF Specification			
	Min.	**Typical.**	**Max**
Output Power (Class		4 dBm	
Output Power (Class 2)		0 dBm	
Sensitivity @ BER=0.1%		-89 dBm	
Sensitivity @ BER=0.01%		-89 dBm	
Sensitivity @ BER=0.01%		-84 dBm	
Maximum Input Level	GFSK (1Mbps):-20dBm		
	π/4-DQPSK (2Mbps) :-20dBm		
	8DPSK (3Mbps) :-20dBm		

7. Dimension & Pin Assignments

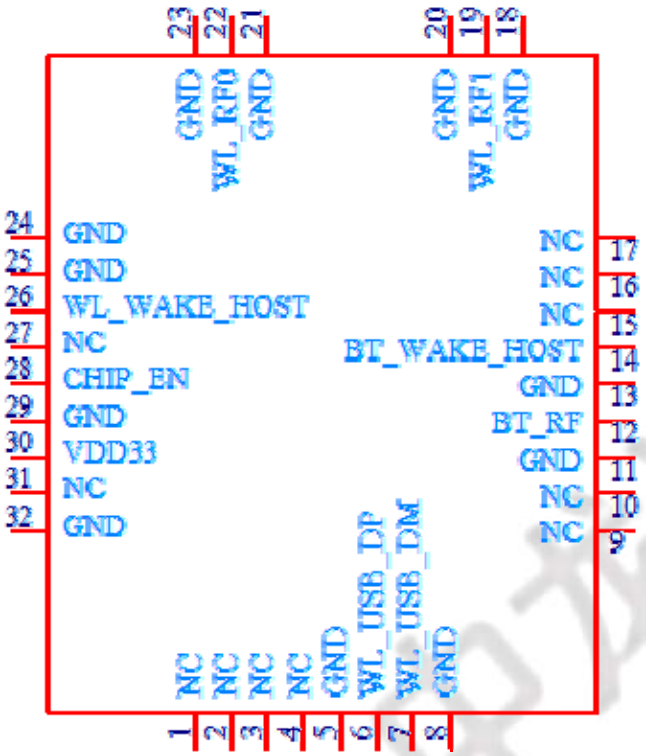

NO	Nam	Type	Descri
1	NC	_	No connection (Floating)
2	NC	_	No connection (Floating)
3	NC	_	No connection (Floating)
4	NC	_	No connection (Floating)
5	GND	_	Ground connections
6	USB_DP	I/O	USB data+ (USB2.0)
7	USB_DM	I/O	USB data- (USB2.0)
8	GND	_	Ground connections
9	NC	_	No connection (Floating)
10	NC	_	No connection (Floating)
11	GND	_	Ground connections
12	NC	I/O	BT RF port
	BT RF	I/O	BT RF port
13	GND	_	Ground connections
14	BT_WAKE	O	BT wake up HOST
15	NC	_	No connection (Floating)
16	NC	_	No connection (Floating)
17	NC	_	No connection (Floating)

18	GND	_	Ground connections
19	NC	I/O	WL_RF1 I-PEX
20	GND	_	Ground connections
21	GND	_	Ground connections
22	NC	I/O	WL_RF0 I-PEX
23	GND	_	Ground connections
24	GND	_	Ground connections
25	GND	_	Ground connections
26	WL_WAKE	O	WLAN wake up HOST
27	NC	_	No connection (Floating)
28	CHIP_EN	I	Shutdown Chip when pulled low
29	GND	_	Ground connections
30	VDD33	I	3.3V Voltage input
31	NC	_	No connection (Floating)
32	GND	_	Ground connections

Dimension (Unit: mm)

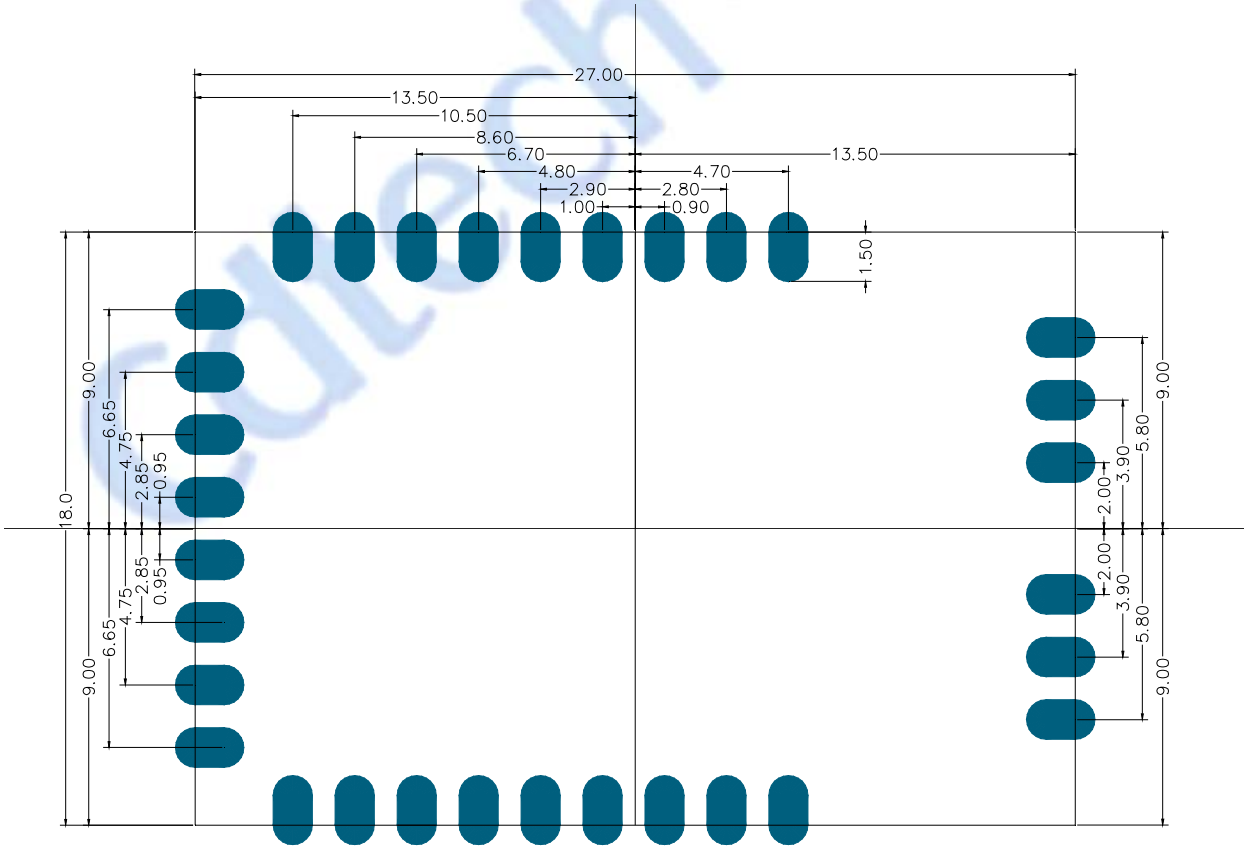

8. Modular photo

CDW-63822CU-00		
CDW-63822CU-01		
Dimension	**27x18x2.4mm (LxWxH)±0.2mm**	

9. Key material list

Type	P/N	supplier
Crystal	40Mhz	JWT ， FK , SFJ
WIFI IC	RTL8822CU-CG	RTL
Diplexers	DPX165900DT-8025A1 SLFD18-5R950G-08T LD18D2450LAN-D34/M	TDK，Sunlord,GLEAD
PCBA VER	63822CU	A,O,S

10. Recommended Reflow Profile

Referred IPC/JEDEC standard.

Peak Temperature : <250°C

Number of Times : 2 times

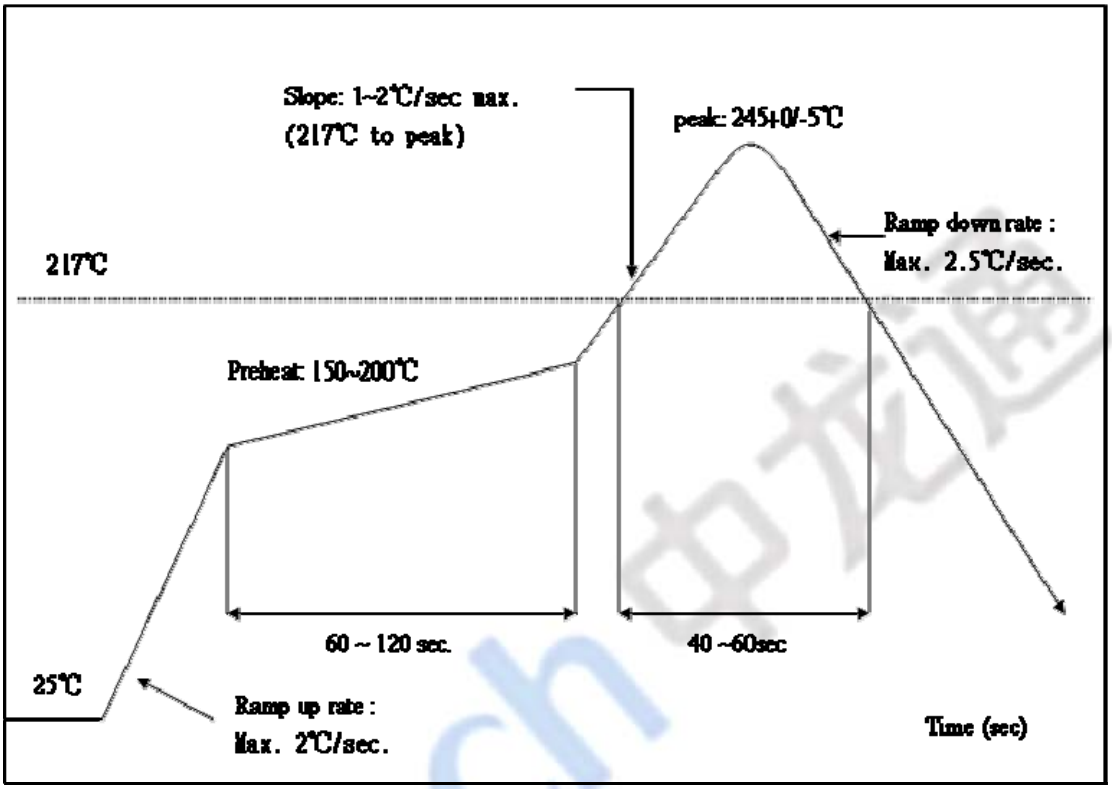

11. Packing information

1).Carrier size Detail:

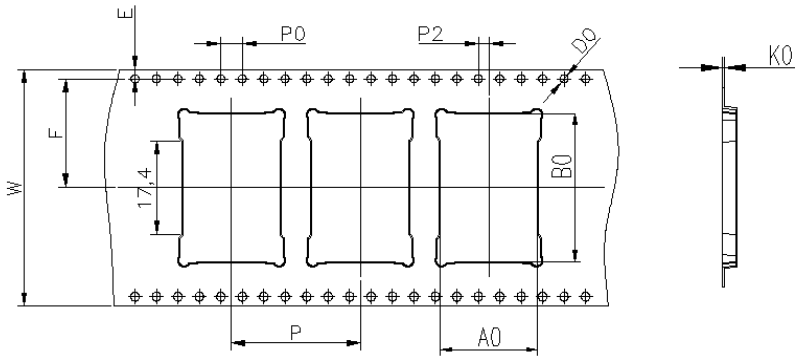

ITEM	W	A0	B0	K0	P	F	E	D	P0	P2	t
DIM	44.0	18.1	27.5	2.5	24	20.2	1.75	1.50	4.00	2.00	0.3
TOLE	+0.30 −0.30	+0.10 −0.10	+0.10 −0.10	+0.10 −0.10	+0.10 −0.10	+0.30 −0.30	+0.10 −0.10	+0.10 −0.00	+0.10 −0.10	+0.20 −0.20	+0.05 −0.05

2).Packaging Detail:

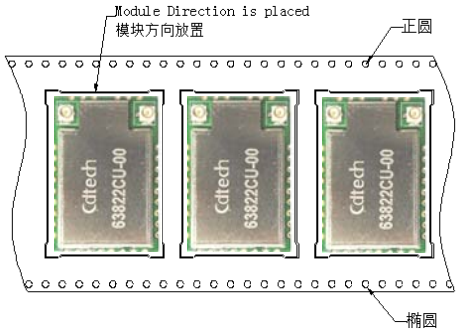

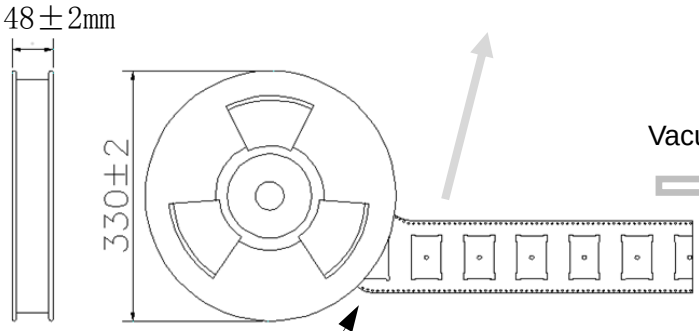

Color of plastic disc: blue
A roll of 1000pcs(前后留空20pcs)

Vacuum packing

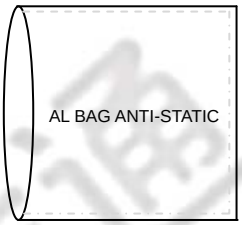

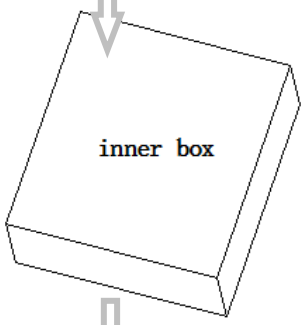

inner box K3K:
33.5cm*34.7cm*7cm
A box of 1000 PCS

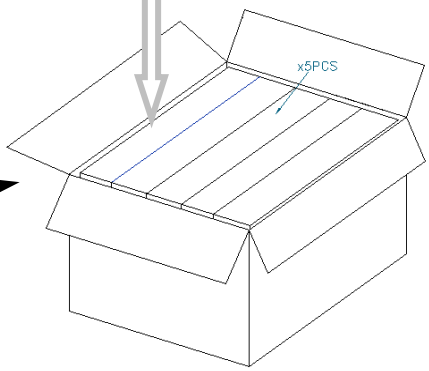

carton K=A:
36.4*35.7*37.5cm
A case of 5000 PCS

ESD CAUTION

The CDW-63822CU-00/01 is ESD (electrostatic discharge) sensitive device and may be damaged with ESD or spike voltage. Although CDW-63822CU-00/01 is with built-in ESD protection circuitry, please handle with care to avoid the permanent malfunction or the performance degradation.