CDW-B18821C-00

DATASHEET

Software：

客　　户 Customer	客户承认 Approve（请盖印章）	日 期 Date

拟制 Design	审核 Check	批准 Approve	版本 Version	日期 Date
刘丽君	陈章进	李魏	V1.0	2018.06.09

深 圳 市 中 龙 通 电 子 科 技 有 限 公 司
CHINA DRAGON TECHNOLOGY LIMITED
工厂地址：深圳市宝安区沙井街道南浦路林坡坑蚝三第一工业园 B4 栋
电话：(86　755) 81449957
传真：(86　755) 81449967
E-mail: Info@cdtech.cn
Http://www.cdtech.cn

更改记录：

Reversion History：

版本 Version	日期 Date	更改内容 Modification
1.0	2018.06.09	新版发行

1.Overview

The B18821C-00 is a highly-integrated IEEE 802.11 a/b/g/n/ac MAC/Baseband/RF WLAN and Bluetooth Baseband/RF single chip. For Wireless LAN (WLAN) operation, it supports 1-stream 802.11ac solution with Multi-user MIMO (Multiple-Input, Multiple-Output) STA mode with USB2.0 network interface controller. For Bluetooth operation, it supports Bluetooth 2.1/4.2 with USB interface controller.
The B18821C-00 baseband implements multiuser Multiple-Input Multiple-Output (MIMO) Orthogonal Frequency Division Multiplexing (OFDM) STA mode with one transmit and one receive path (1T1R). Features include one spatial stream transmission, short Guard Interval (GI) of 400ns, spatial spreading, and support for variant channel bandwidths. Moreover, B18821C-00 provides one spatial stream Space-Time Block Code (STBC) and Low Density Parity Check (LDPC) to extend the range of transmission. As the recipient, the B18821C-00 also supports explicit sounding packet feedback that
helps senders with beamforming capability

2.Features

- CMOS MAC, Baseband PHY and RF in a single chip for IEEE 802.11a/b/g/n/ac compatible WLAN
- Support 802.11ac 1x1,Wave-2 compliant with MU-MIMO STA mode
- Complete 802.11n MIMO solution for 2.4GHz and 5Ghz band
- Maximum PHY data rate up to 86.7Mbps using 20MHz bandwidth, 200Mbps using 40MHz bandwidth, and 433.3Mbps using 80MHz bandwidth.
- Backward compatible with 802.11a/b/g devices while operating at 802.11n data rates
- Backward compatible with 802.11a/n devices while operating at 802.11ac data rates.
- Complies with USB 2.0 for WLAN and BT controller
- Support 2.4GHz and 5GHz band channels
- Build-in both 2.4GHz and 5GHz PA
- Build-in both 2.4GHz and 5GHz LNA
- Single external power source 3.3V only
- Compatible with Bluetooth 2.1+EDR Support Bluetooth 4.2 system

3. Block Diagram

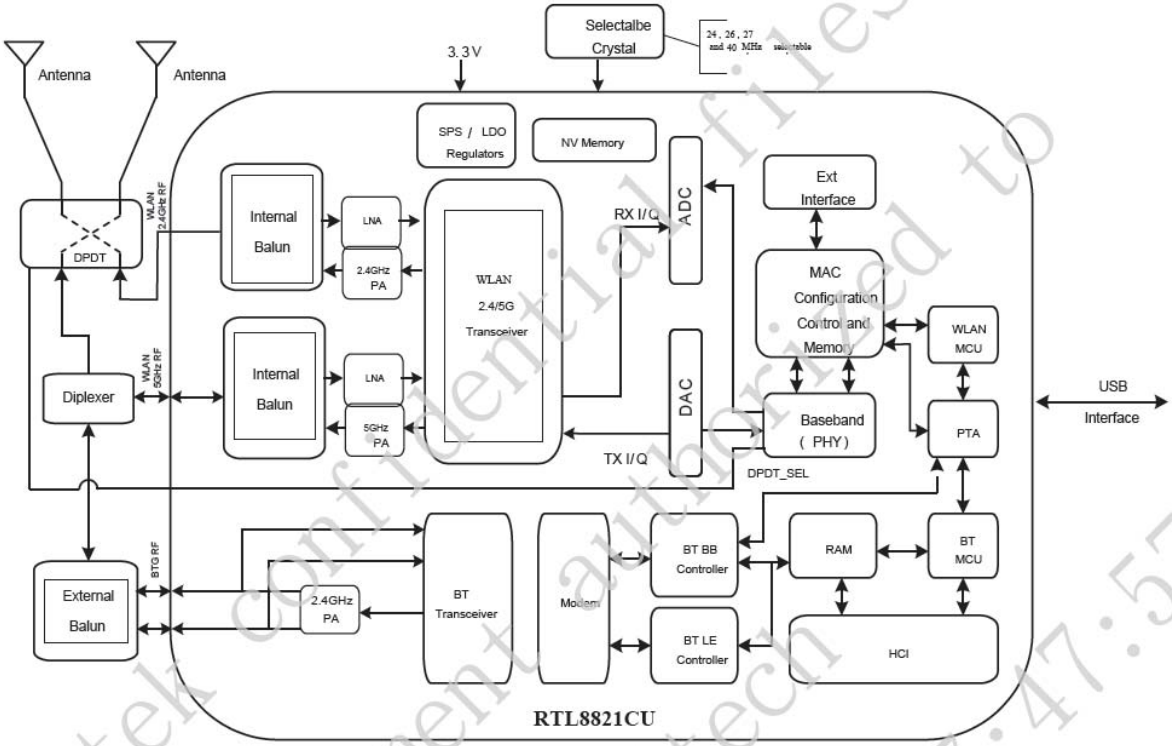

4.General Specification

Model	CDW. B18821C-00
Product Name	1T1R+BT4.2 Module
Major Chipset	RTL8821CU
Standard	802.11 a/b/g/n/ac, BT2.1/3.0/4.0/4.1/4.2
Modulation Method	DSSS/BPSK/ QPSK/ 16-QAM/64-QAM and 256QAM
Frequency Band	2.4~2.4835GHz , 5.0~5.8 GHz
WiFi Interface	USB2.0
BT Interface	USB2.0
Operating Temperature	-20° C ~ 70° C
Storage Temperature	-40° C ~ 85°C
Humidity	5% to 90% maximum
Dimension	13x12.2 x1.5(LxWxH) ±0.1mm

5.RF Specification

5.1 2.4GHz RF Specification

Feature	Description
WLAN Standard	IEEE 802.11a/b/g/n WiFi compliant
Frequency Range	2.400 GHz ~ 2.497 GHz
Number of Channels	2.4GHz: Ch1 ~ Ch14
Modulation	802.11b : DQPSK, DBPSK, CCK 802.11 g/n : OFDM /64-QAM,16-QAM, QPSK, BPSK
Output Power	802.11b /11Mbps : 16dBm ± 2 dB @ EVM ≤ -15dB
	802.11g /54Mbps : 15 dBm ± 2 dB @ EVM ≤ -28dB
	802.11n /MCS7 : 14 dBm ± 2 dB @ EVM ≤ -30dB
Receive Sensitivity (11b,20MHz) @8% PER	- 1Mbps PER @ -93 dBm, typical
	- 2Mbps PER @ -91 dBm, typical
	- 5.5Mbps PER @ -88 dBm, typical
	- 11Mbps PER @ -86 dBm, typical
Receive Sensitivity (11g,20MHz) @10% PER	- 6Mbps PER @ -90 dBm, typical
	- 9Mbps PER @ -89 dBm, typical
	- 12Mbps PER @ -88 dBm, typical
	- 18Mbps PER @ -85 dBm, typical
	- 24Mbps PER @ -82 dBm, typical
	- 36Mbps PER @ -79 dBm, typical
	- 48Mbps PER @ -74 dBm, typical
	- 54Mbps PER @ -72 dBm, typical
Receive Sensitivity (11n,20MHz) @10% PER	- MCS=0 PER @ -90 dBm, typical
	- MCS=1 PER @ -87 dBm, typical
	- MCS=2 PER @ -85 dBm, typical
	- MCS=3 PER @ -81 dBm, typical
	- MCS=4 PER @ -78 dBm, typical
	- MCS=5 PER @ -73 dBm, typical
	- MCS=6 PER @ -72 dBm, typical
	- MCS=7 PER @ -70 dBm, typical
	- MCS=0 PER @ -87 dBm, typical
	- MCS=1 PER @ -84 dBm, typical
	- MCS=2 PER @ -82 dBm, typical

Receive Sensitivity (11n, 40MHz) @10% PER	- MCS=3 PER @ -79 dBm, typical
	- MCS=4 PER @ -75 dBm, typical
	- MCS=5 PER @ -71 dBm, typical
	- MCS=6 PER @ -69 dBm, typical
	- MCS=7 PER @ -68 dBm, typical
Receive Sensitivity (11ac, 20MHz) @10% PER	- MCS=0, NSS1 PER @ -89 dBm, typical
	- MCS=1, NSS1 PER @ -86 dBm, typical
	- MCS=2, NSS1 PER @ -85 dBm, typical
	- MCS=3, NSS1 PER @ -81 dBm, typical
	- MCS=4, NSS1 PER @ -78 dBm, typical
	- MCS=5, NSS1 PER @ -73 dBm, typical
	- MCS=6, NSS1 PER @ -71 dBm, typical
	- MCS=7, NSS1 PER @ -70 dBm, typical
	- MCS=8, NSS1 PER @ -67 dBm, typical
Receive Sensitivity (11ac, 40MHz) @10% PER	- MCS=0, NSS1 PER @ -86 dBm, typical
	- MCS=1, NSS1 PER @ -84 dBm, typical
	- MCS=2, NSS1 PER @ -82 dBm, typical
	- MCS=3, NSS1 PER @ -79 dBm, typical
	- MCS=4, NSS1 PER @ -75 dBm, typical
	- MCS=5, NSS1 PER @ -71 dBm, typical
	- MCS=6, NSS1 PER @ -69 dBm, typical
	- MCS=7, NSS1 PER @ -68 dBm, typical
	- MCS=8, NSS1 PER @ -63 dBm, typical
	- MCS=9, NSS1 PER @ -58 dBm, typical
Maximum Input Level	802.11b : -10 dBm
	802.11g/n : -20 dBm
Antenna Reference	Small antennas with 0~2 dBi peak gain

6.Pin Description and PCB size

NO	Name	Description
1	GND	Ground connections
2	WL_BT_ANT	5G wifi and BT ANT
3	WL_ANT	2.4G WIFI ANT
4	GND	Ground connections
5	NC	No connection
6	NC	No connection
7	NC	No connection
8	NC	No connection
9	BT_WAKE_HOST	Bluetooth device to wake-up HOST
10	HOST_WAKE_BT	HOST to wake-up Bluetooth device
11	VDD33	3.3V POWER INPUT
12	D-	USB DATA DM
13	D+	USB DATA DP
14	GND	Ground connections
15	GPIO1	3DD_SYNC GPIO
16	WL_DIS	WIFI Disable
17	BT_DIS	Biuetooth Disable
18	CHIP_EN	CHIP enable
19	HOST_WAKE_WL	HOST to wake-up WIFI device
20	WL_WAKE_HOST	WIFI device to wake-up HOST
21	GPIO2	WPS GPIO
22	GPIO8	LED GPIO

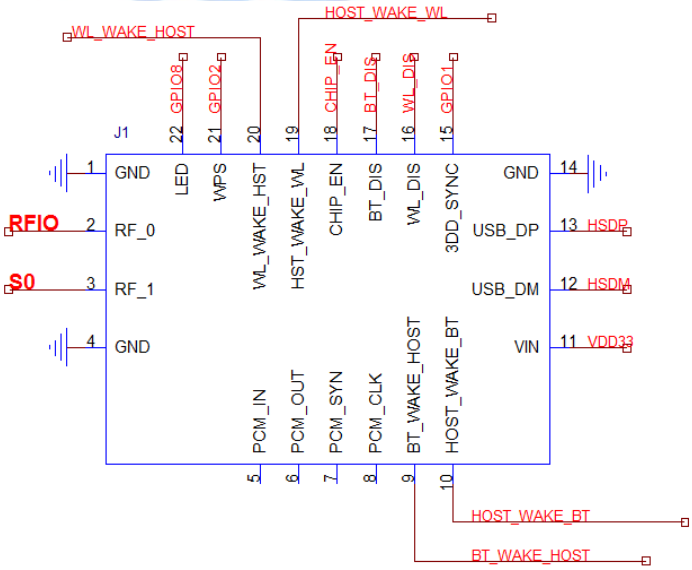

TOP VIEW

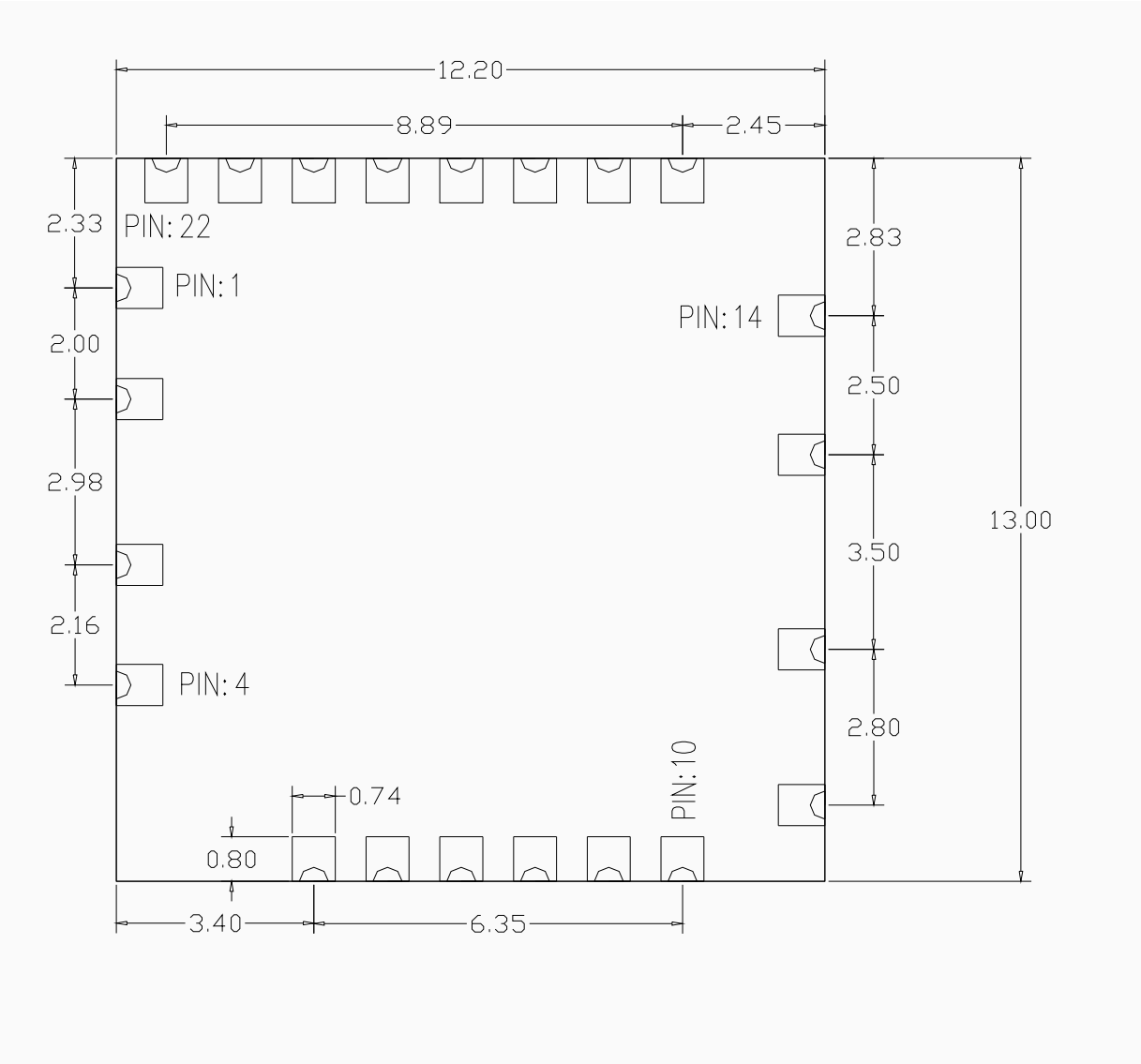

Module Photo

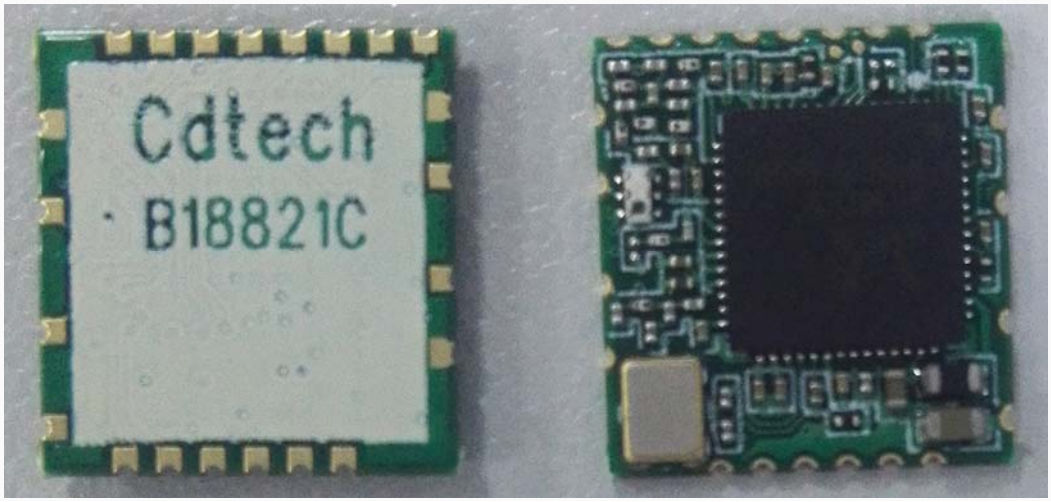

7 .Supplier

二级供应商清单	
物料名称	供应商品牌
晶振	JWT/FK
电感	Sunlord
wifi 芯片	REALTEK
电容	SAMSUNG /EYANG
电阻	UniOhm /YAGEO
PCB(12.2*13*0.8mm)	A,O

8.Recommended Reflow Profile

Referred IPC/JEDEC standard.

Peak Temperature : <250°C

Number of Times : 2 times

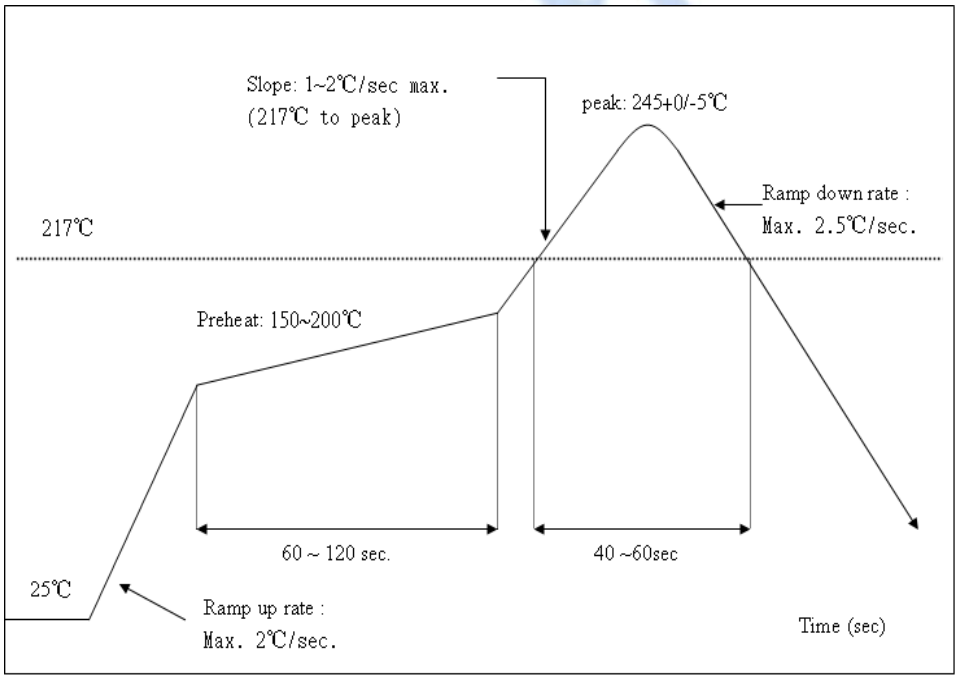

9. Packing information

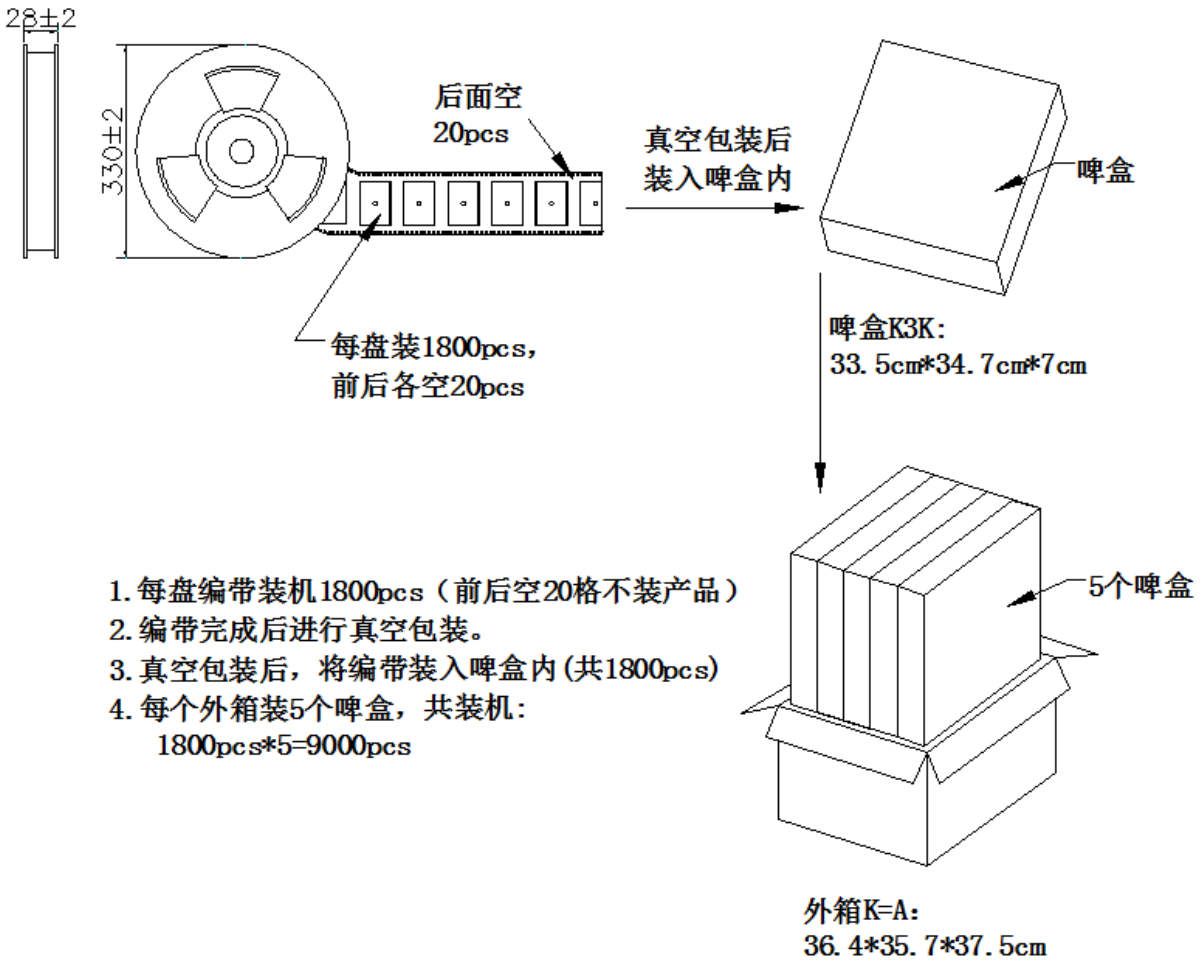

1. 每盘编带装机1800pcs（前后空20格不装产品）
2. 编带完成后进行真空包装。
3. 真空包装后，将编带装入啤盒内(共1800pcs)
4. 每个外箱装5个啤盒，共装机:
   1800pcs*5=9000pcs

ESD CAUTION

The CDW-B18821C-00 is ESD (electrostatic discharge) sensitive device and may be damaged with ESD or spike voltage. Although CDW-B18821C-00 is with built-in ESD protection circuitry, please handle with care to avoid the permanent malfunction or the performance degradation.